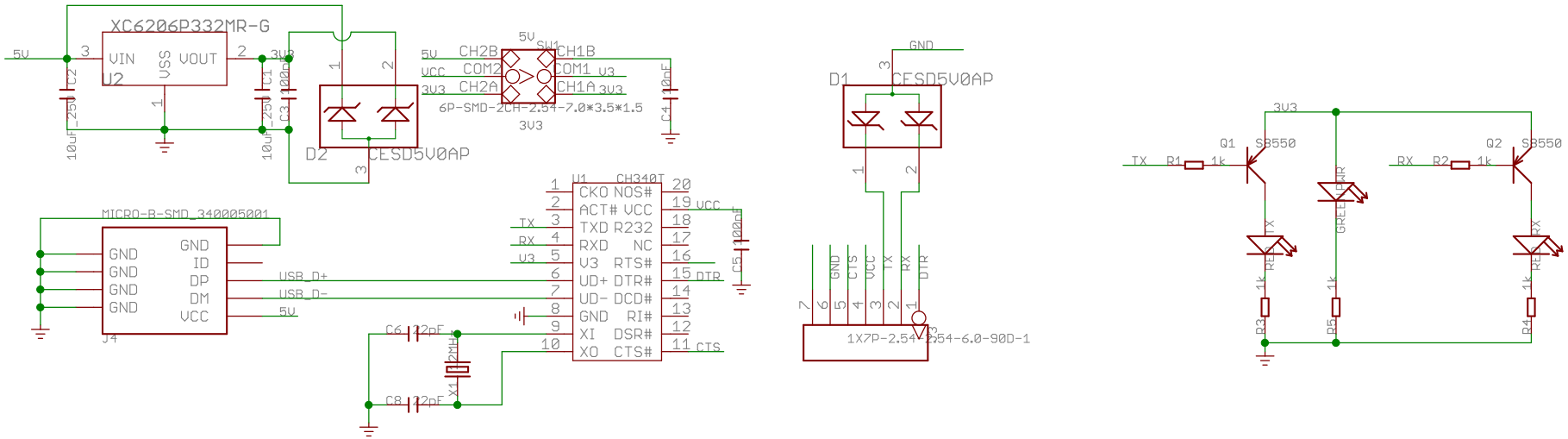

SeeedStudio

TITLE: USB To Uart_5V_3V3 v1

Design: Wangcf	Check: Bruce	
Date: ?????	Vision: v1.0	Sheet: 1/1